Pedigree Notes

- A pedigree is a_____which shows the_____within a family.
- Pedigrees are used to:
  - _____how the traits are passed from one generation to the next.
  - inferring_____(carriers)
- Pedigrees are based on the individuals_____.
- So, if someone has the trait being studied, they are "phenotypically _____."
- How to read a pedigree…

Square =_____ or

Circle =_____ or 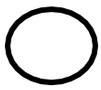

Shaded means "**Phenotypically Affected**" or

Un-shaded means "**Phenotypically Unaffected**" or 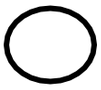

A line connecting a male and a female represents a marriage.

A line coming off of a male and a female represents their_____.

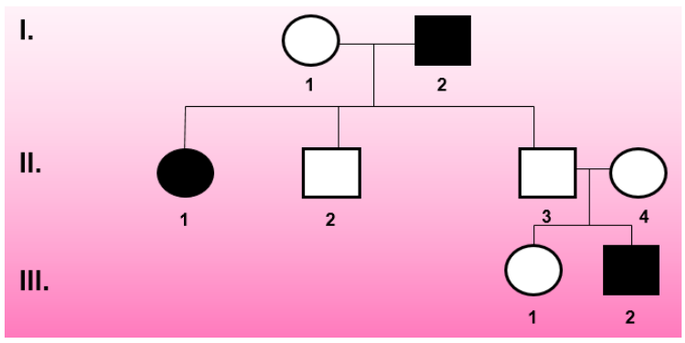

Sometimes the pedigree will show half-filled shapes. This indicates a carrier.

What is a carrier? _____

Practice:

1. How many children did this first couple have? _____
2. How many grandchildren did this first couple have? _____
3. How many people in this family are affected? _____
4. How many people can you be certain are **carrying** the trait? _____
5. If the allele for this trait is the letter "e", assign a genotype to all of the individuals you are sure of.
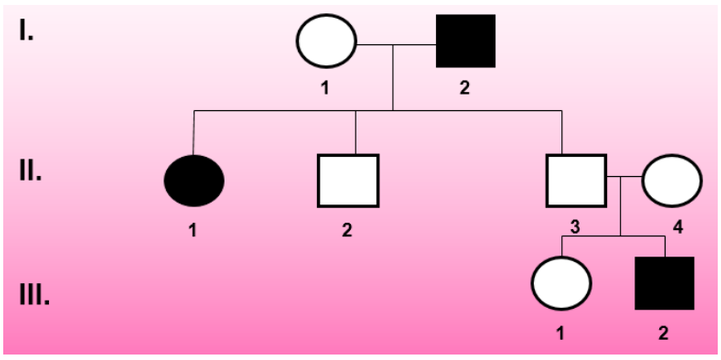
6. So which individual is the only one we cannot be sure of? _____